MATERIAL AND SURFACE PROTECTION OF ELEMENT			
I	ALSi 12 Cu-231-DIN EN AB-47000	JED-007-3	BODY,GEHAEUSE,CORPO,CORPS USINE
II	JED-657	JED-240-3	COVER,DECKEL.COUVERCLE,COPERCHIO
III	JED-534-3	-	HANDLE,GRIFF,MANCHE,IMPUGNATURA
IV	JED-051M5 Ⓓ	Ⓓ JED-739-3	Ⓓ REMF 4 SCREW,SCHRAUBE,VIS,VITE
V	JED-048M1	Ⓓ JED-371-1	RETAINING RING,SICHERUNGSRING,CIRCLIP,ANELLO DI SICUREZZA
VI	JED-077-1	JED-007-1	NAME PLATE 899 053 803 4

WORKING MEDIUM ARBEITSMEDIUM FLUIDE D'UTILISATION FLUIDO DI ESERCIZIO	AIR (CONTAINING WATER,OIL AND ALCOHOL) LUFT (WASSER,OEL UND ALKOHOLHALTIG) AIR (CHARGE D'EAU, D'HUILE ET DE D'ALCOOL) ARIA (CONTENENTE ACQUA,OLIO ED ALCOOL)
AMBIENT MEDIUM UMGEBUNGSMEDIUM FLUIDE AMBIENT FLUIDO AMBIENTE	AIR (CONTAINING WATER AND SALT) LUFT (WASSER, UND SALZHALTIG) AIR (CHARGR D'EAU ET DEL SEL) ARIA (CONTENENTE ACQUA ED SALE)
WORKING TEMPERATURE THERMISHER ARBEITSBEREICH TEMPERATURE DE FONCTIONNEMENT TEMPERATURA DO UTILIZAZZIONE	-40° +80°C
SHORT TERM RESISTANCE TO HEAT KURZZEITIGE WAERMEBESTAENDIGKEIT RESISTANCE THERMIQUE TEMPORAIRE RESISTENZA TERMICA PER BREVE PERIODO	MAX. 1h AT 110°C
MAX INLET PRESSURE MAX BETRIEDSDRUCK PRESSION D'ALIMENTATION MAXI PRESSIONE MASSIMA D'ALIMENTAZIONE	10 BAR
TORQUE ANZUGSMOMENT * COUPLE DE SERRAGE COPPIA DI SERRAGGIO	53±2 Nm

** ACCORDING TO JED-152 THREAD LENGTH MIN. = 13 MM
THREAD LENGTH NOT VALID WITH JED-152 BUT APPROVED

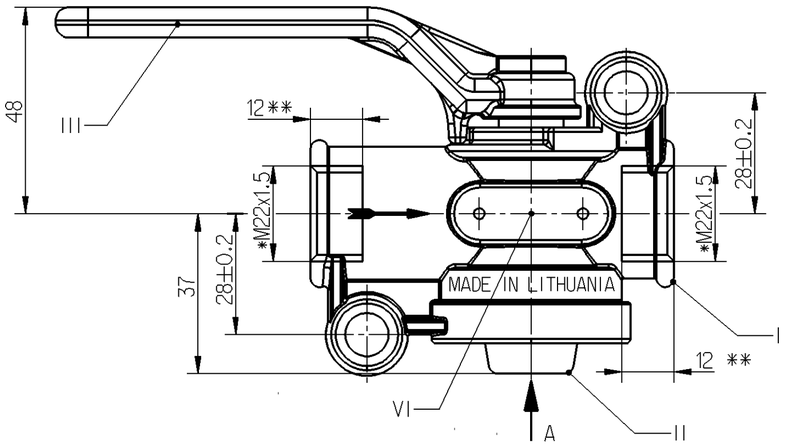

VIEW A

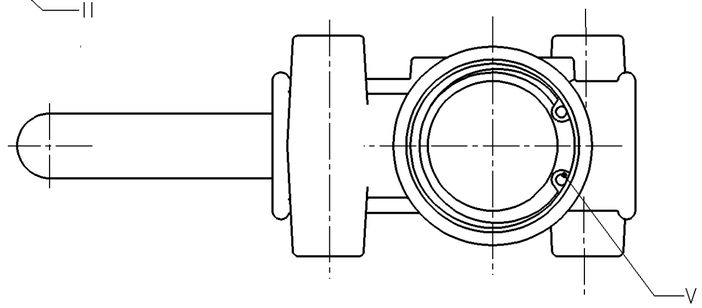

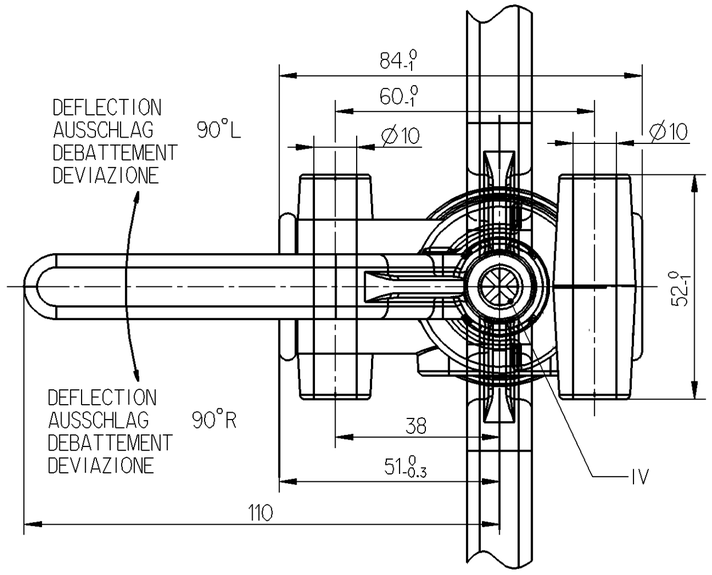

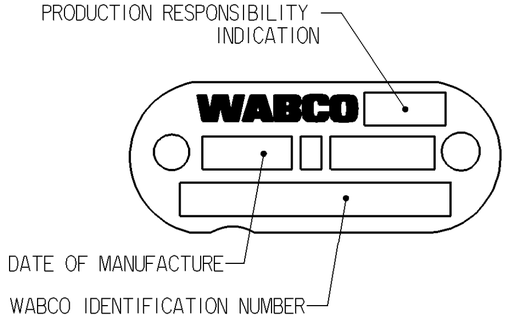

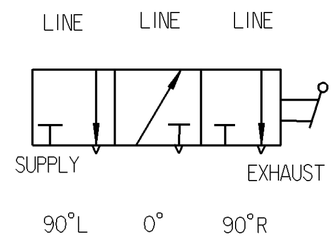

General Specification: JED-334-O					
Further Technical Data:					
Doc. Code:		Sheet:	To		
General Tolerances JED-261					
Class 1)	Range of Nominal Dimensions (± mm) ≤ 50	> 50 ≤ 180	> 180 ≤ 400	> 400	∢
Fine	0.5	1.0	1.5	2.0	±3°
Medium X	1.0	2.0	3.0	4.0	
Coarse	2.0	3.5	5.0	6.5	
Tapped Holes acc. JED-152					
1) Tolerance Class Applied Crossmarked					

Copyright WABCO®

Date	Signature
Drawn 2013-02-19	Haran
Checked 2013-04-03	Hladik
Expert CEPENDA	

WABCO

THREE-WAY COCK
DREIWEGEHAHN
ROBINET A TROIS VOIES
RUBINETTO A TRE VIE

Mass	Scale	Material No.	Date of first issue: 2006-11-08		
Ⓓ 0.265 KG	1:1	452 002 132 0	Doc.Code 005	Language ML	Sheet 1/1
Size A 2	CAD System Pro/E	ECN-No. 160046 / Revision 5 x D / Techn. Resp. 5720	Replacement for		

100mm

Toute Communication ou reproduction de ce document, toute exploitation ou communication de son contenu sont interdites, sauf autorisation expresse. Tout manquement à cette règle constitue un abus évident et expose son auteur au versement de dommages et intérêts. Tous droits de propriété intellectuelle réservés, notamment en matière de brevets et de modèles.

Weitergabe sowie Vervielfältigung dieser Unterlage, Verwertung und Mitteilung ihres Inhalts nicht gestattet, soweit nicht ausdrücklich zugestanden. Zuwiderhandlungen stellen einen offensichtlichen Missbrauch dar und verpflichten zu Schadensersatz. Alle Rechte für den Fall der Patenterteilung oder Gebrauchsmustereintragung vorbehalten.

Non è permesso consegnare a terzi o riprodurre questo documento, né utilizzarne il contenuto o renderlo comunque noto a terzi senza autorizzazione esplicita. Ogni violazione costituisce un abuso evidente ed espone il suo autore al risarcimento dei danni subiti. Tutti i diritti di proprietà intellectuale riservati, compresi quelli derivanti da brevetti o modelli.

Copying of this document and giving it to others and the use or communication of the contents thereof, are forbidden without express authority. Offenders are liable to the payment of damages. All rights are reserved in the event of the grant of a patent or registration of a utility model or design. This document is the subject of copyright.