A Nidec Group Company
Nidec Motors & Actuators
All for dreams

Series SW2K
Motor type 403 939

Design Data	
Commutation	Brushed
Direction of rotation	Bi-directional
Bearing type	A: Ball - B: Sleeve

0277 AR

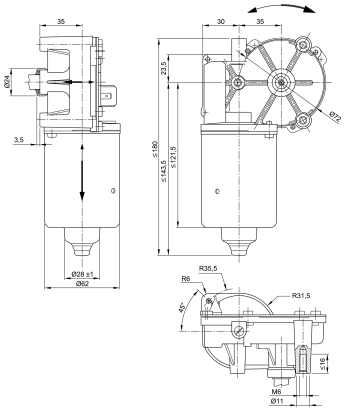

Performance data		
Rated voltage [V]	U_N	24
Nominal torque [Nm]	M_N	5.00
No-load speed [min^{-1}]	n_N	40.0
Nominal power [W]	P_N	16.8
Nominal current [A]	I_N	3.0
Nominal force [kN]	F_N	0.00
Duty cycle		s1

Sensor data	
Pulses	0
Output channels	0

Other data	
Gear ratio	78/1
Gear wheel material	Plastic
Suppression components	
Enclosure class	IP40
Weight [kg]	1.200

Remarks:

Motor picture

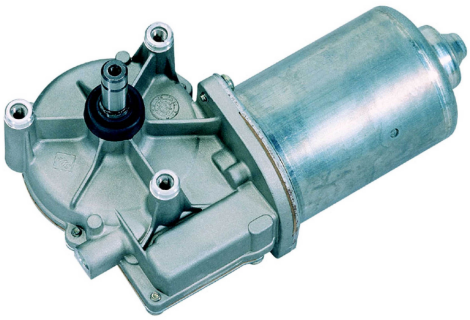

Characteristic curves

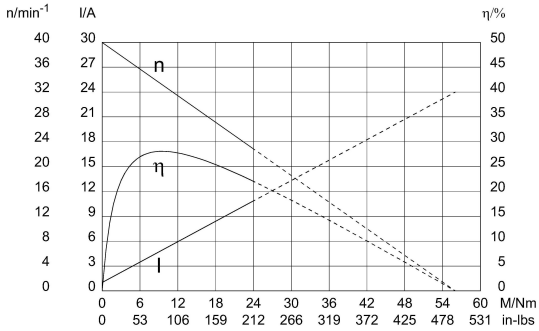

Output shaft drawing (W), Wiring diagrams (S) and Connector layout (K)

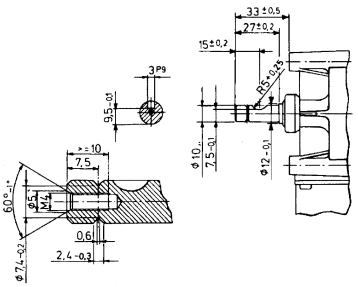

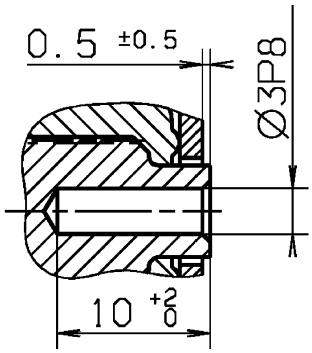

S 30

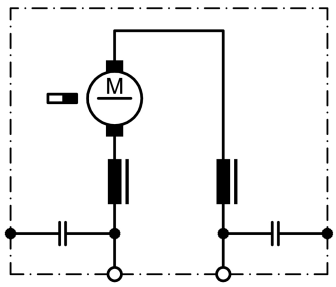

NIDEC MOTORS & ACTUATORS
Europe: +49 7142 5083369 | North America: +52 656 629 3800
www.nidec-ma.com
sales@nidec-ma.com

Output shaft drawing (W), Wiring diagrams (S) and Connector layout (K)

K 144

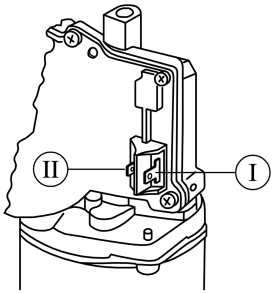

I Blade terminal ends 6,3 x 0,8 DIN 46 244
II Blade terminal ends 4,8 x 0,8 DIN 46 244

Notes