Nidec Motors & Actuators — All for dreams

Series SWMK
Motor type 403 475

Design Data	
Commutation	brushed
Direction of rotation	bidirectional
Bearing Type	

Performance data		
Nominal Voltage [V]	U_N	24
Nominal Torque [Nm]	M_N	0,80
Nominal Speed [min^{-1}]	n_N	322
Nominal Power [W]	P_N	27,0
Nominal current [A]	I_N	4,0
Nominal force [kN]	F_N	0,00
Duty cycle		s1

Sensor data	
Pulses	0
Output channels	0

Other data	
Gear ratio	41/4
Gear wheel material	plastic
Suppression components	""
Enclosure class	IP 30
Weight [kg]	1,200

Remarks:

0270 AL

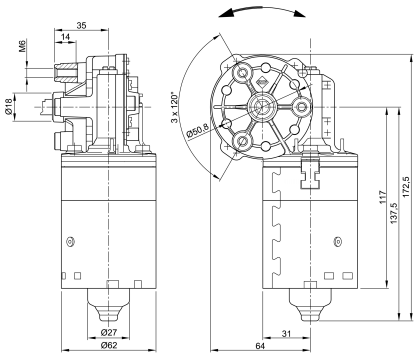

Motor picture

Characteristic Curves

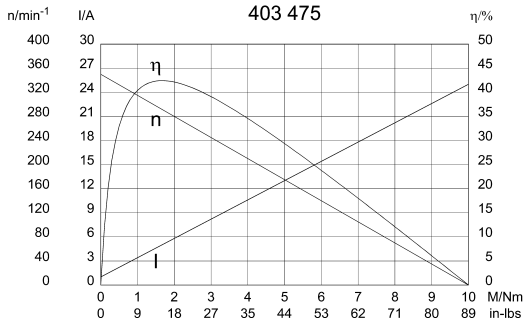

Output shaft drawing (W), Wiring diagrams (S) and Connector layout (K)

W 159

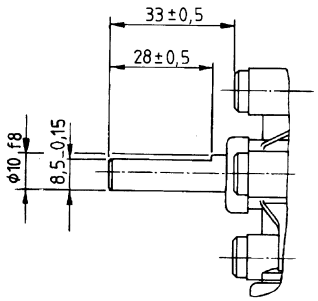

S 30

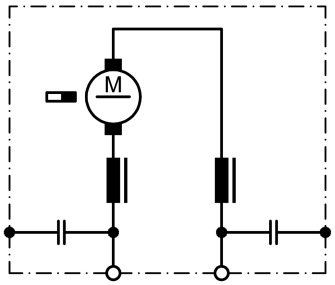

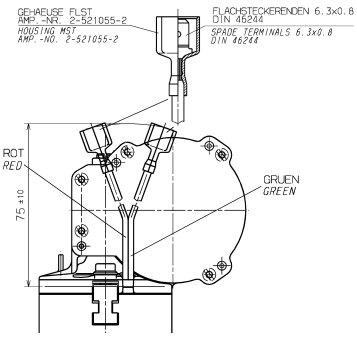

NIDEC MOTORS & ACTUATORS
Europe: +49 7142 5083369 | North America: +52 656 629 3800
www.nidec-ma.com
sales@nidec-ma.com