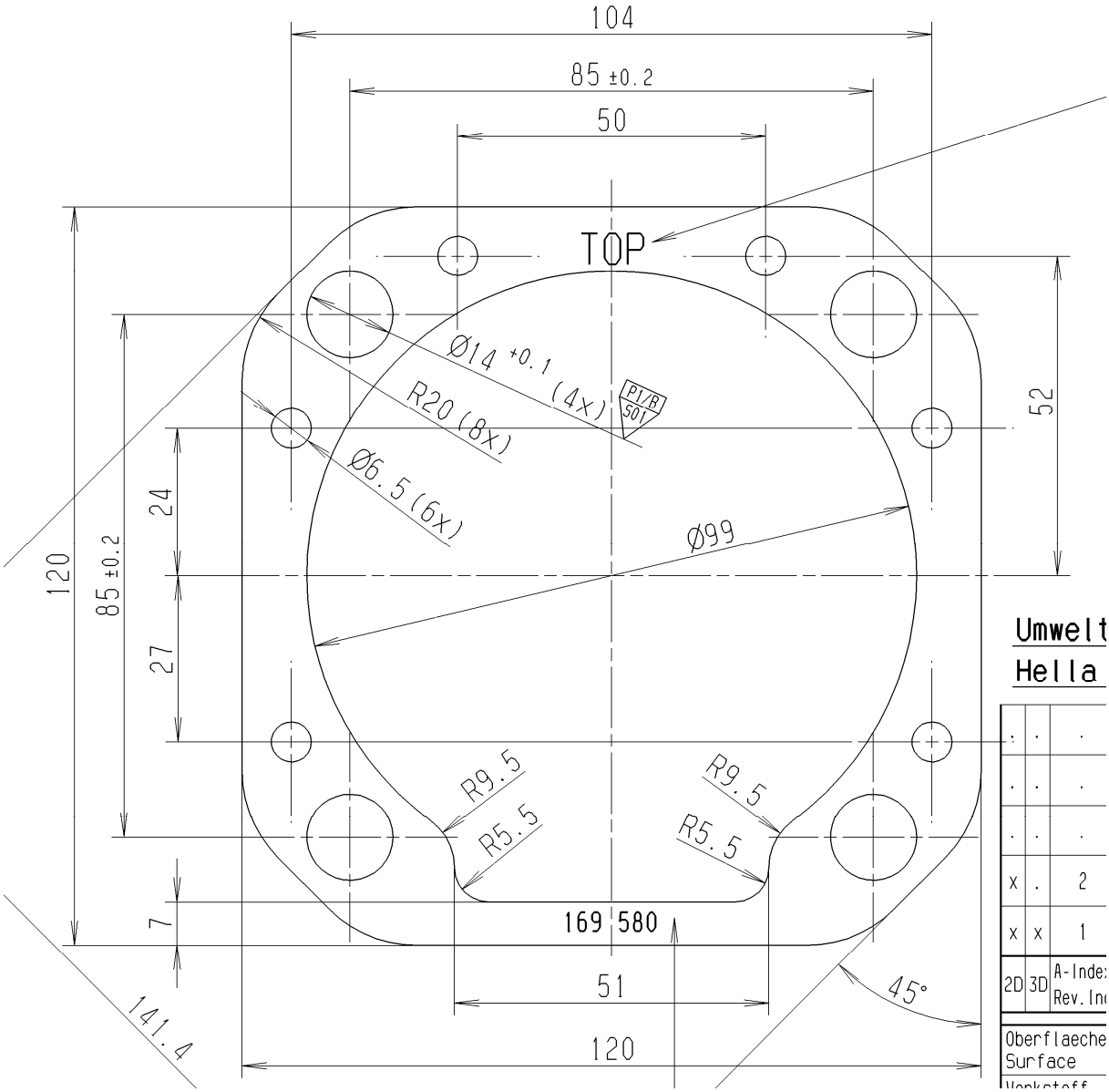
104
85 ±0.2
50
TOP
Ø14 +0.1 (4x)
P1/R 501
R20 (8x)
Ø6.5 (6x)
Ø99
52
24
27
120
85 ±0.2
R9.5
R5.5
R9.5
R5.5
7
169 580
51
45°
141.4
120
Umwelt
Hella
2D
3D
A-Index
Rev. In
Oberflaeche
Surface